Halton RMC, airflow management damper - Technical description

All rights reserved ©Halton

Contents

1 Introduction 3
1.1 About this document 3
1.2 Copyright and disclaimers 3
1.3 Summary of changes 3
2 Product description 4
2.1 Overview 4
2.2 Operating principle 4
2.3 Structure and materials 6
2.4 Dimensions 7
2.5 Product models 8
2.6 Specification 8
2.7 Order code 8
3 Design information 9
3.1 Installation 9
3.2 Commissioning 9
3.3 Maintenance 9

All rights reserved ©Halton

1 Introduction

1.1 About this document

The purpose of this document is to give technical information and design examples for salespersons, technical support and designers.

1.2 Copyright and disclaimers

This document remains the sole property of Halton and may not be duplicated, borrowed, copied, amended, modified, reproduced, transmitted or distributed to any third party without the prior written consent of Halton. Any information held in this document or associated materials may only be used for the purpose specified in this document.

Halton disclaims any and all liability related to this document. Halton gives no explicit or implied warranties in terms of this document. Any permitted use of the information included herein is at your own risk. Halton may amend or replace the information included in this document at its sole discretion without further notice and liability.

All intellectual property rights or applications thereof, including without limitation copyright, model rights, patents, trade secrets, trade names, trademarks, know-how (whether registered or unregistered) attributable to this document remain the sole and exclusive property of Halton. No rights or licenses are granted.

1.3 Summary of changes

Release	Date	Description
1.1	20.10.2026	Updated the "2.3 Structure and materials and 2.6 Specification" sections regarding casing information.
1.0	13.10.2026	Content moved from WordPress. (first published version from Heretto)

All rights reserved ©Halton

2 Product description

2.1 Overview

Fig. 1. Halton RMC, overview

The Halton RMC is a mechanical CAV damper with self- balancing operation. It does not require an external power supply and features a galvanised steel design. It features a large operating range of 50 to 600 Pa and is also available with a pressure range from 50 Pa to 1000 Pa.

- Constant airflow damper without external power supply, self-balancing operation
- Optimised volume flow control unit
- Easy to read scale with volume flow indicator in m^3/h and cfm

2.2 Operating principle

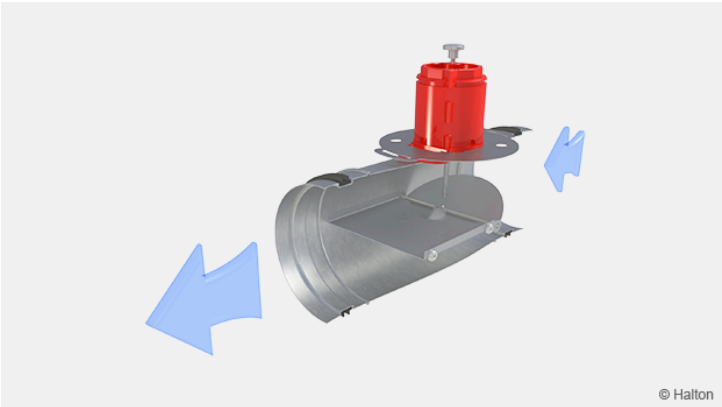

Fig. 2. Halton RMC, operating principle

The Halton RMC constant airflow damper is an independent control element operates without an external power supply, maintaining the required airflow rate regardless of upstream pressure changes. Consequently, system balancing is not needed.

As the dynamic pressure in the duct branch increases, the damper turns, thus increasing the pressure loss and preventing an excessive increase in the airflow rate. Similarly, as the dynamic pressure decreases, the spring returns the blade to the open position, reducing the pressure loss and maintaining a constant airflow rate (as shown in figure below).

All rights reserved ©Halton

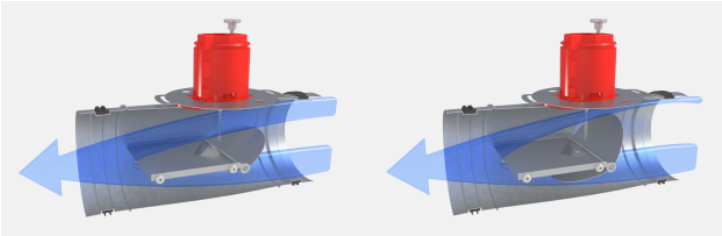

The constant airflow damper includes a damper blade, supported by bearings and connected to an adjustment spring. As a result of the balance between aerodynamic forces and the spring effect, the necessary throttling effect is achieved, resulting in the set airflow rate.

Operating range

The constant airflow damper operates from a minimum pressure difference over the unit, which depends on the air velocity (see diagram below), to a maximum of 1000 Pa.

For example, if the air velocity in the duct is 7 m/s, the unit pressure loss is approximately 100 Pa or higher.

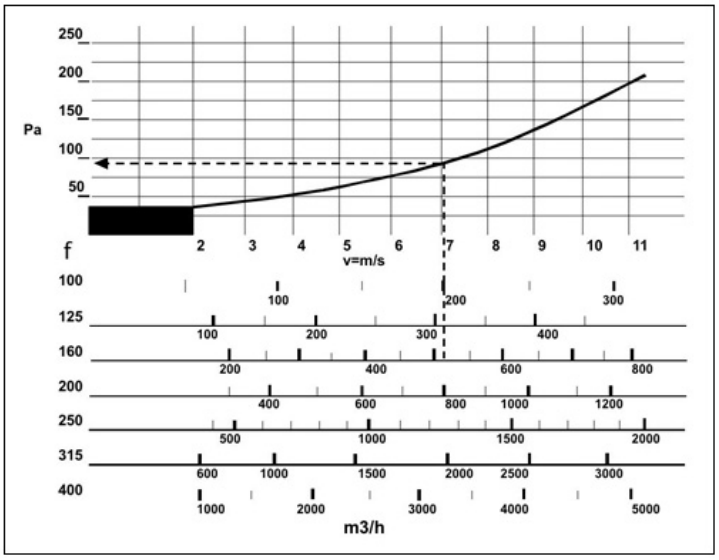

Size	qv min.	qv max	qv min.	qv max	v min.	v max	d_{pst} min.*	d_{pst} max
[mm]	[m^3h]	[m^3h]	[l/s]	[l/s]	[m/s]	[m/s]	[Pa]	[Pa]
80**	40	125	11	35	2.2	6.9	50	1000
100	70	200	19	56	2.5	7.1	50	1000
125	100	280	28	78	2.3	6.3	50	1000
160	180	500	50	139	2.5	6.9	50	1000
200	250	900	69	250	2.2	8.0	50	1000
250	500	1500	139	417	2.8	8.5	50	1000
315	800	2200	222	611	2.9	7.8	50	1000
355**	900	3200	250	889	2.5	9.0	50	1000

All rights reserved ©Halton

Size	qv min.	qv max	qv min.	qv max	v min.	v max	d_{pst} min.*	d_{pst} max
[mm]	[m^3h]	[m^3h]	[l/s]	[l/s]	[m/s]	[m/s]	[Pa]	[Pa]
400	1000	3800	278	1250	2.2	8.4	50	1000

* Control inaccuracy less than 20%.

** New dimensions

2.3 Structure and materials

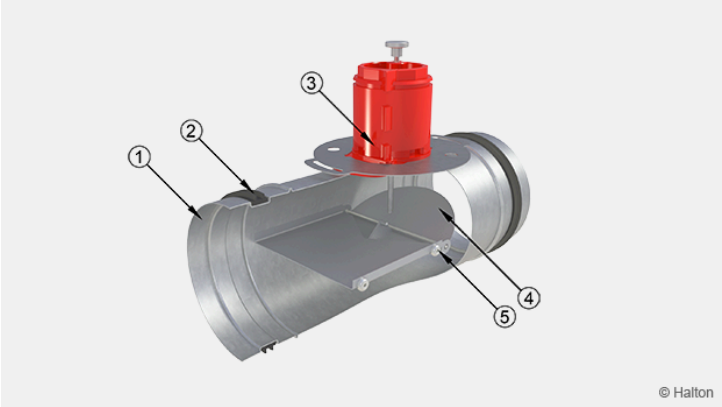

Fig. 3. Halton RMC, structure

No.	Part	Material	Note
1	Housing	Galvanised steel	All Halton RMC models are optionally available in AISI 316L stainless steel and ATEX versions.
2	Ring seals	Rubber	-
3	Tube for the adjustment	Plastic	-
4	Damper blade	Aluminium	-
5	Damper blade bearings	PTFE	-

All rights reserved ©Halton

2.4 Dimensions

Halton RMC/N (without insulation)

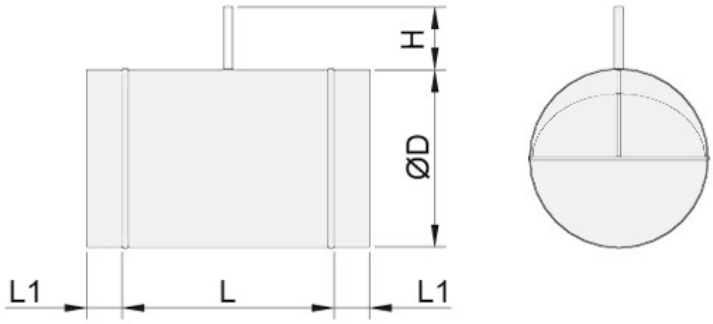

Halton RMC/I (insulated)

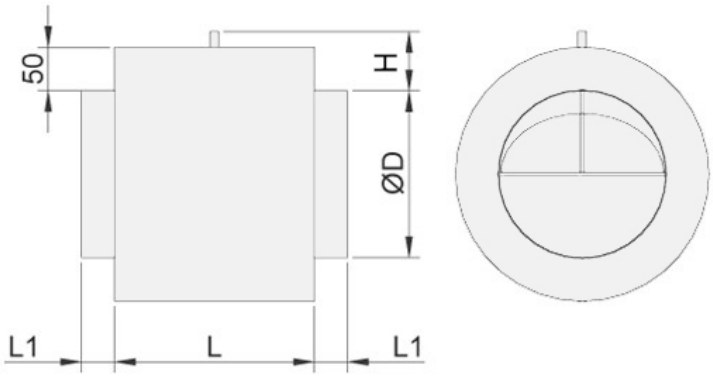

NS	L	L1	H	ØD
[mm]	[mm]	[mm]	[mm]	[mm]
80*	165	40	75	79
100	165	40	75	99
125	165	40	75	124
160	235	40	75	159
200	235	40	75	199
250	235	40	75	249
315	225	60	110	314
355*	295	60	110	354
400	295	60	110	399

* New dimensions

All rights reserved ©Halton

2.5 Product models

Product model	Code	Description
Standard	N	Without insulation
External insulation	I3	Mineral wool, thickness 50 mm, for sound insulation and reduction of heat transfer

2.6 Specification

Function

- The constant airflow damper operates without an external electrical or pneumatic.
- The damper operates with an adjustable spring.

Materials

- The damper casing is made of galvanised steel. However, all models are optionally available in AISI 316L stainless steel and ATEX versions.
- The damper blade and adjustment device are made of aluminium.
- The damper casing is insulated with mineral wool as sound and thermal insulation material (optional).

Structure

- The damper with a manual adjustment device shall be easily set or reset on the work site during commissioning.

2.7 Order code

RMC-M-D; ZT

Main options	
M = Model	
N	Standard (without insulation)
I3	Insulated (50 mm)
D = Duct connection size [mm]	80, 100, 125, 160, 200, 250, 315, 355, 400

Other options and accessories	
ZT = Tailored product	
N	No
Y	Yes (ETO)

Order code example
RMC-N-100; ZT=N

All rights reserved ©Halton

3 Design information

3.1 Installation

The constant airflow management damper can be installed on both horizontal and vertical ducts. However, when installed in vertical ducts, the adjustable spring must be positioned horizontally.

Safety distances for the damper

The airflow control damper should be installed in an undisturbed airflow. The airflow velocity profile in the duct should be sufficiently even, without disturbances from bends, T-branches, etc.

The required safety distance after a bend (90° elbow) or T-branch is 2.5 times the duct diameter (2.5D). The damper should be installed so that the arrow points in the direction of the airflow. See the installation examples below.

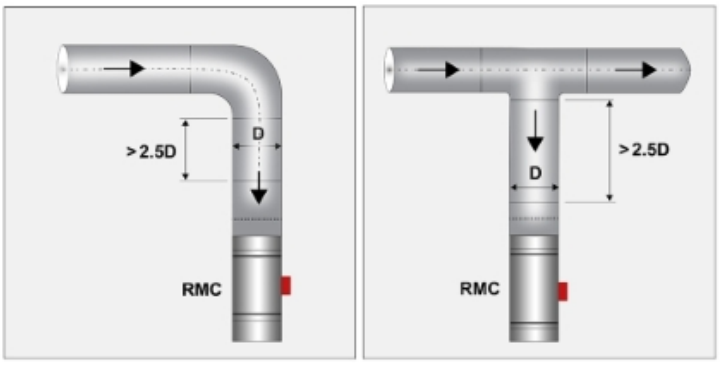

3.2 Commissioning

Each damper arrives pre-calibrated for optimal airflow efficiency based on its diameter. On-site airflow adjustments can be made easily within the control range:

- For sizes 80 to 250, simply turn the control knob for quick and precise tuning, no tools required.
- For sizes 315 to 400, use a screwdriver or Allen key to adjust the spring compression according to the clearly marked flow rate scale on the adjustment cylinder.

3.3 Maintenance

All components are designed to be maintenance-free, non-ageing, and corrosion-resistant under normal operating conditions. Routine functional checks are generally unnecessary. However, accessibility for inspection and commissioning must be ensured in accordance with the standard DIN EN 12097, which specifies access requirements for ventilation duct systems.

In standard applications, no further maintenance actions are required beyond ensuring that installation conditions and airflow profiles remain within the specified operating parameters.

All rights reserved ©Halton